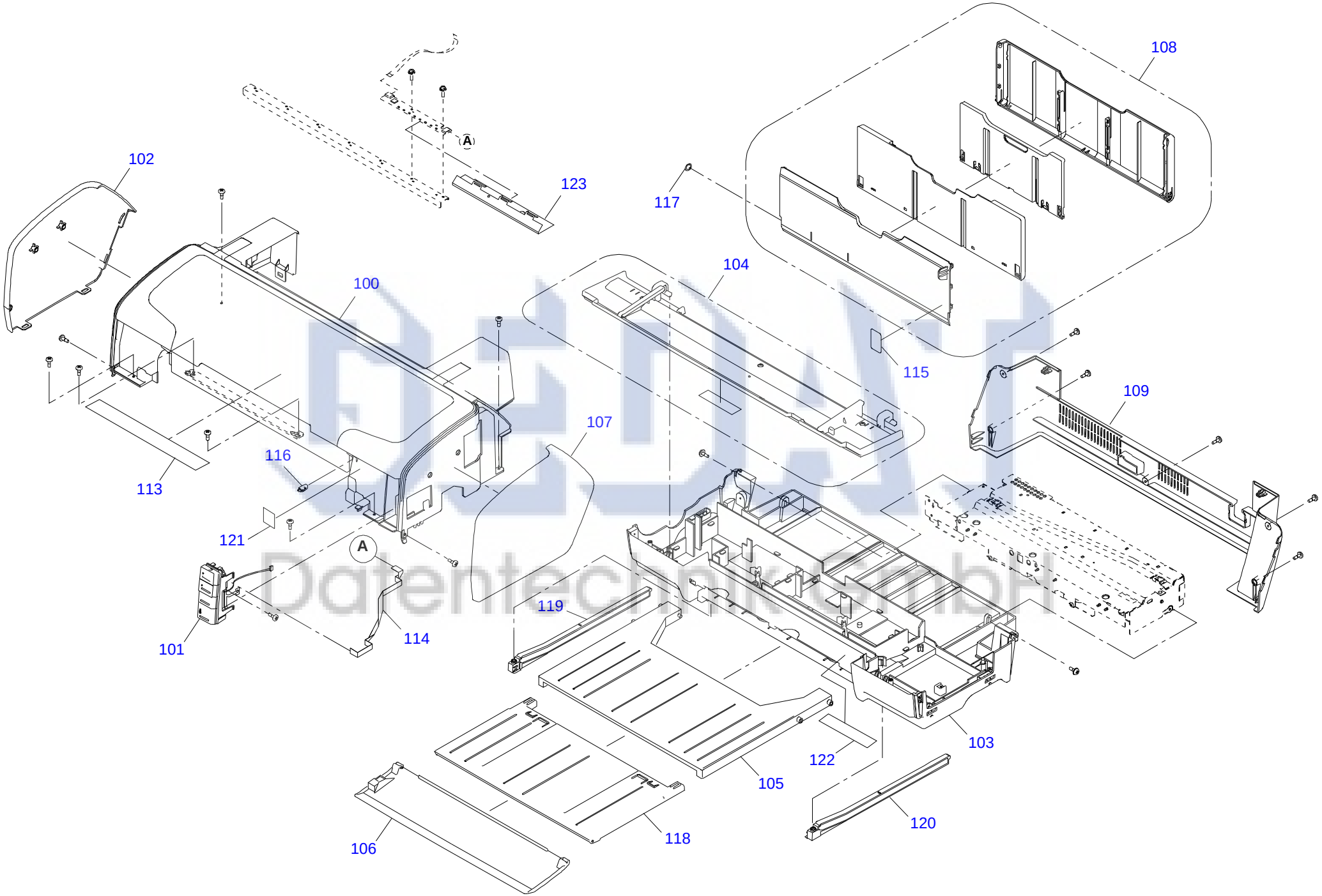

PX-G5000 / EPSON STYLUS PHOTO R1800 No.2 Rev.03 C589-CASE-013

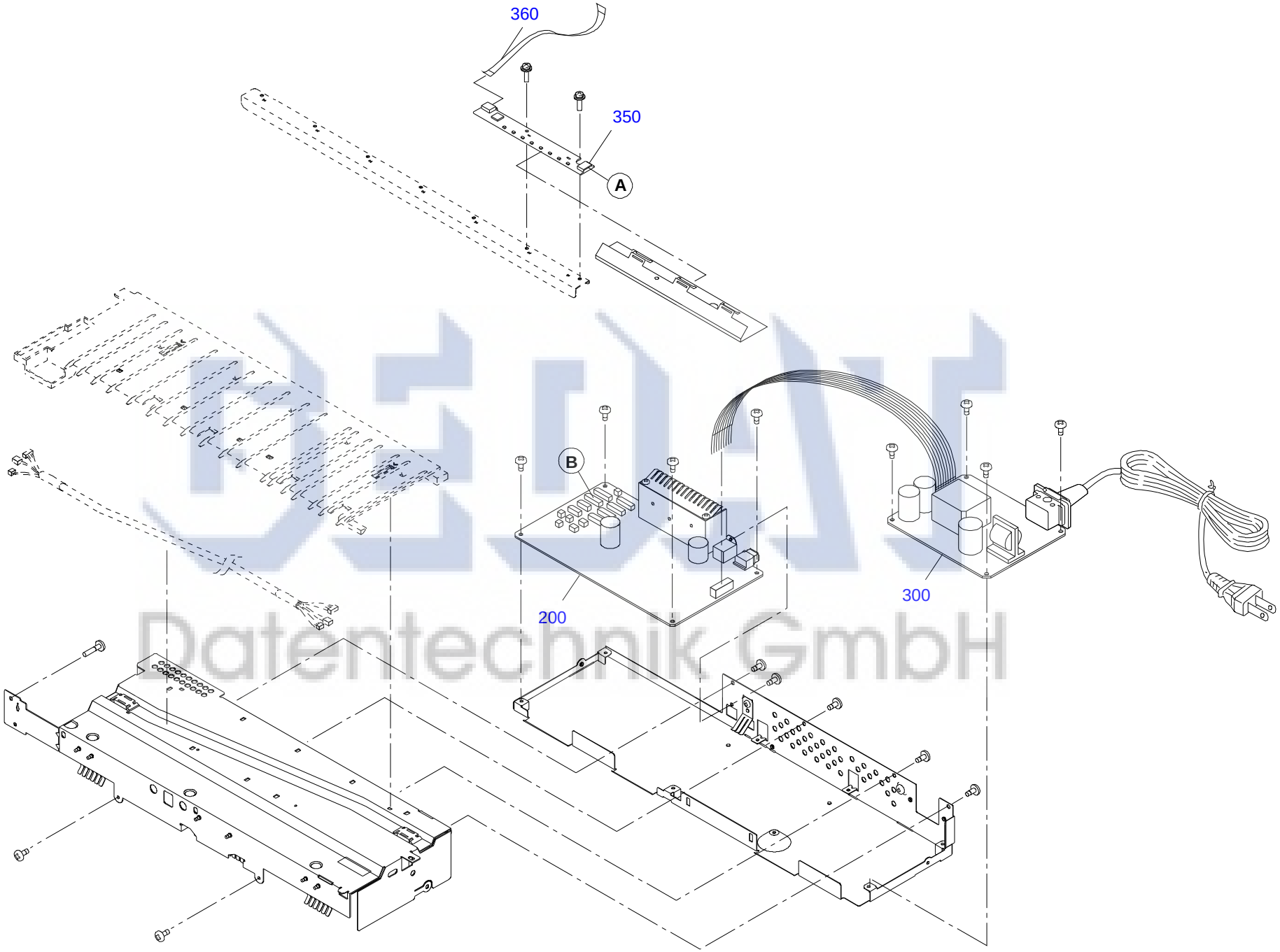

PX-G5000 / EPSON STYLUS PHOTO R1800 No.3 Rev.02 C589-ELEC-012

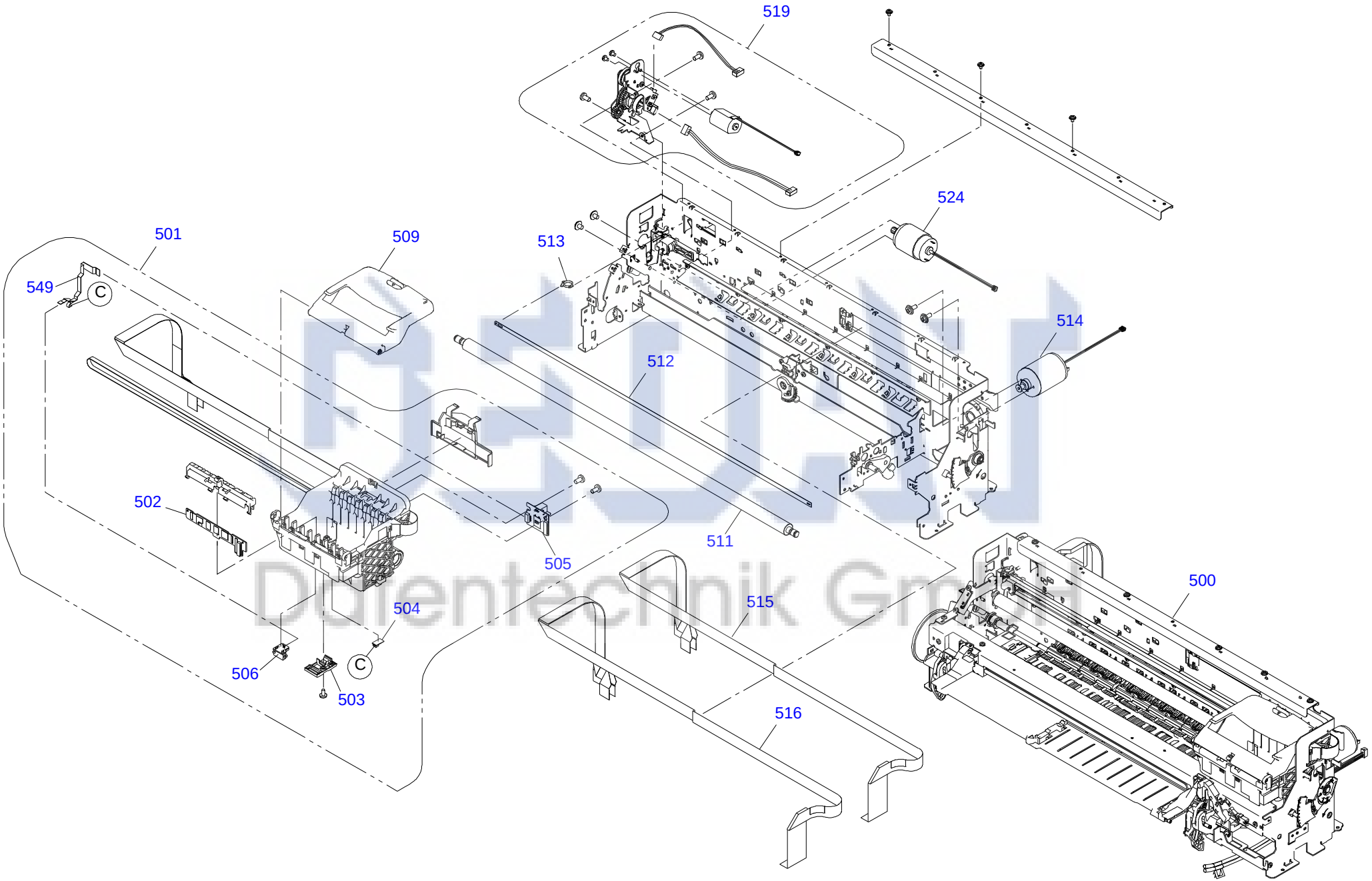

PX-G5000 / EPSON STYLUS PHOTO R1800 No.4 Rev.01 C589-MECH-011

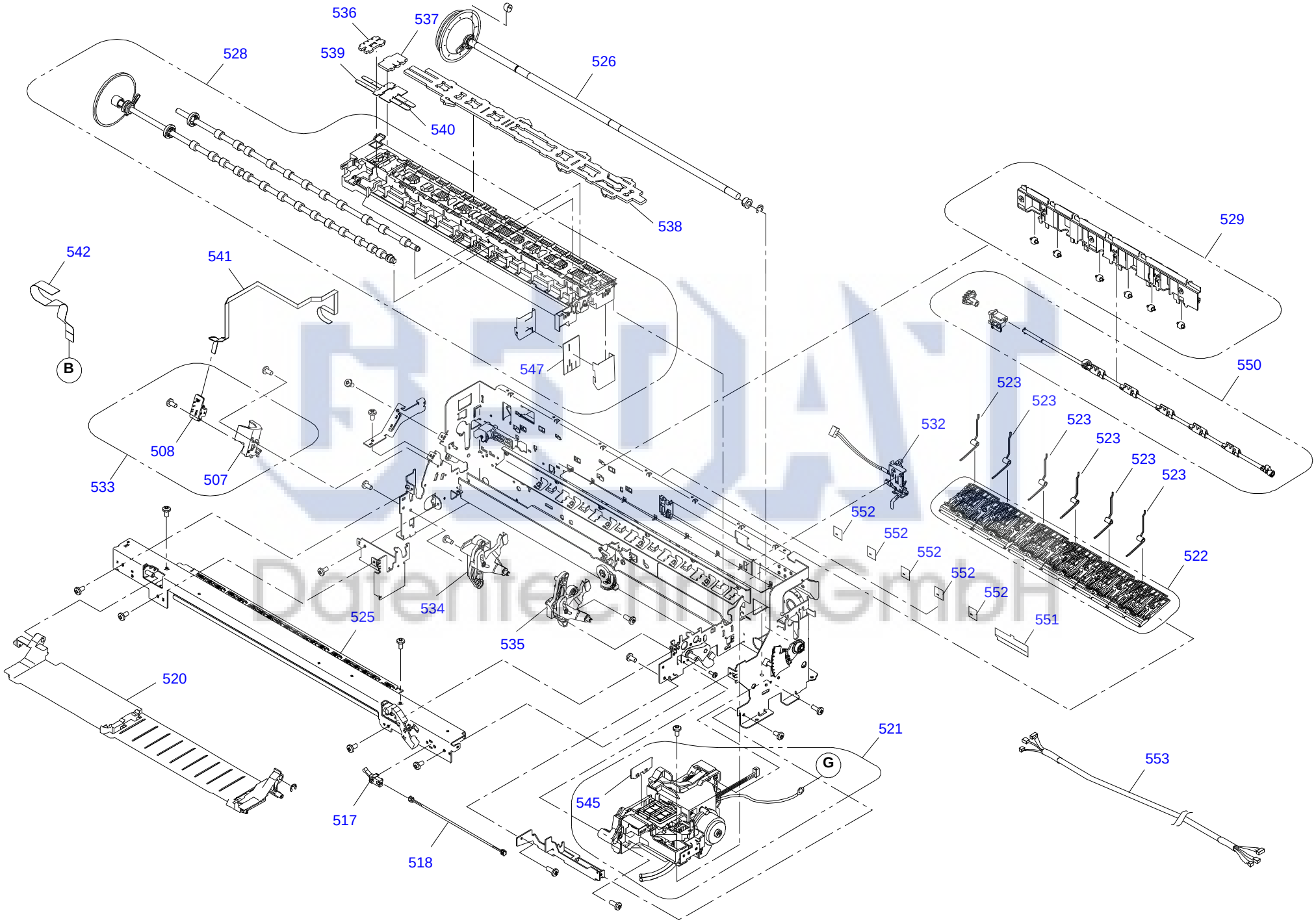

PX-G5000 / EPSON STYLUS PHOTO R1800 No.5 Rev.03 C589-MECH-023

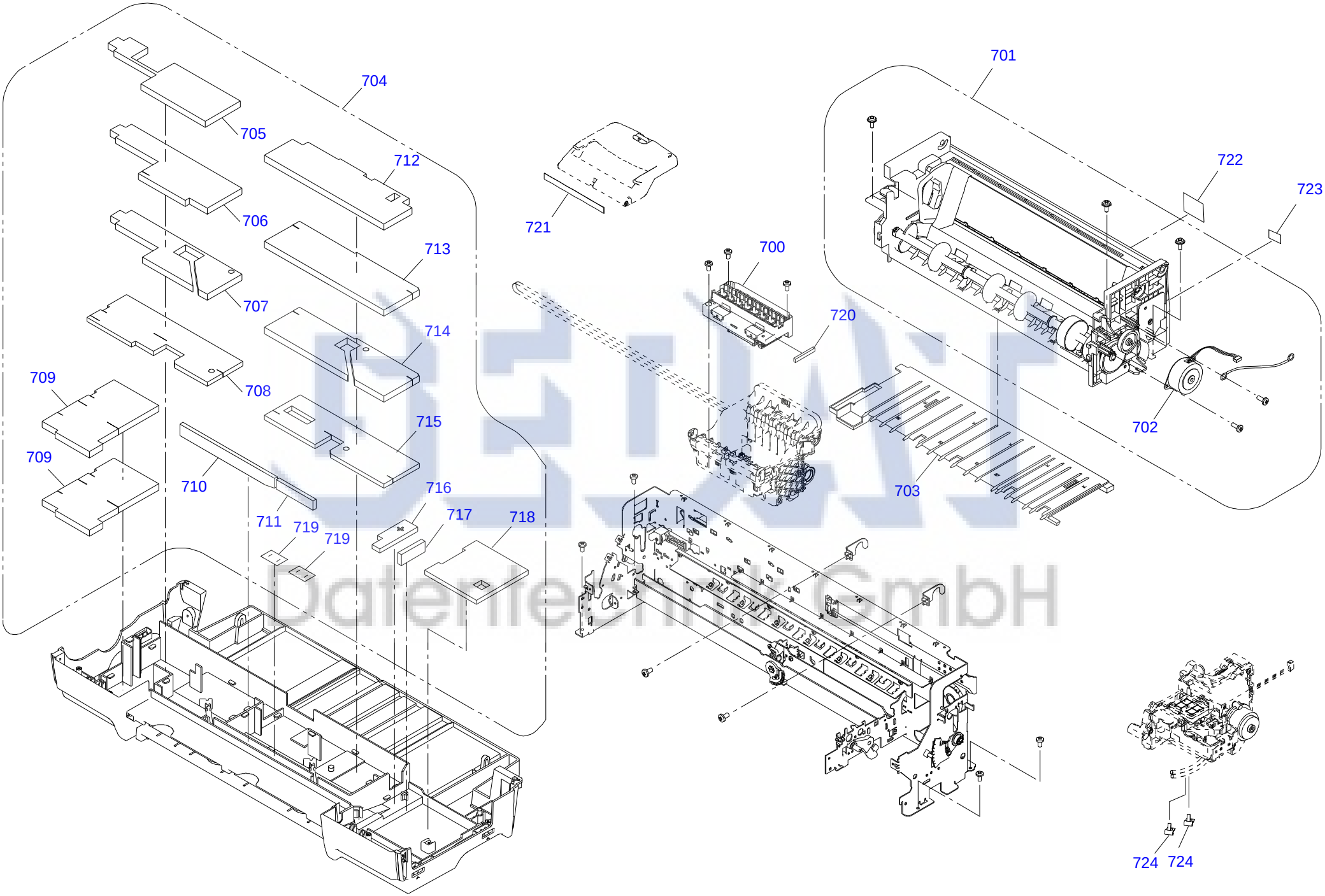

PX-G5000 / EPSON STYLUS PHOTO R1800 No.6 Rev.01 C589-MECH-031

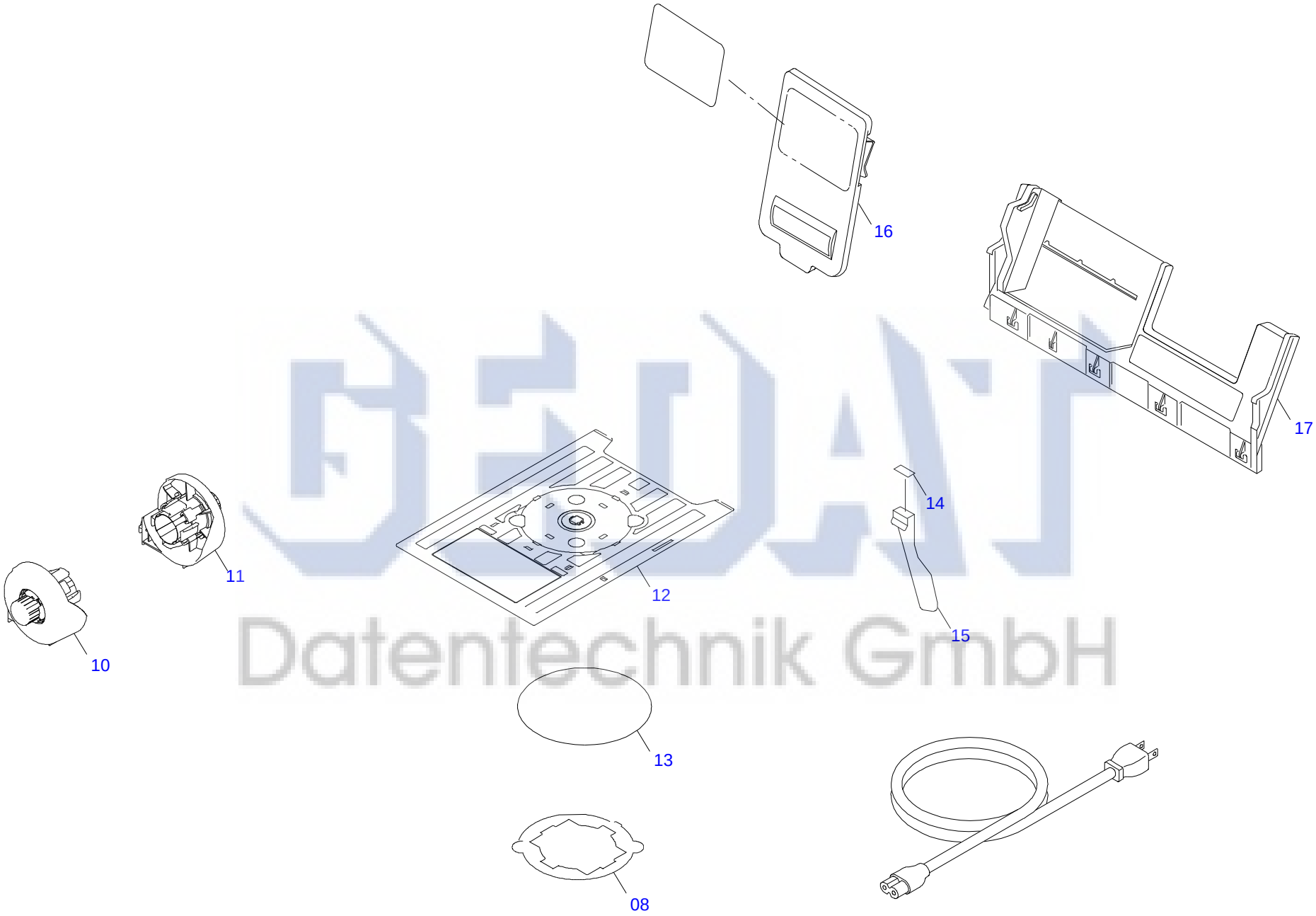

GEDAT Datentechnik GmbH

EPSON STYLUS PHOTO R1800 No.1 Rev.02 C589-ACCE-012E